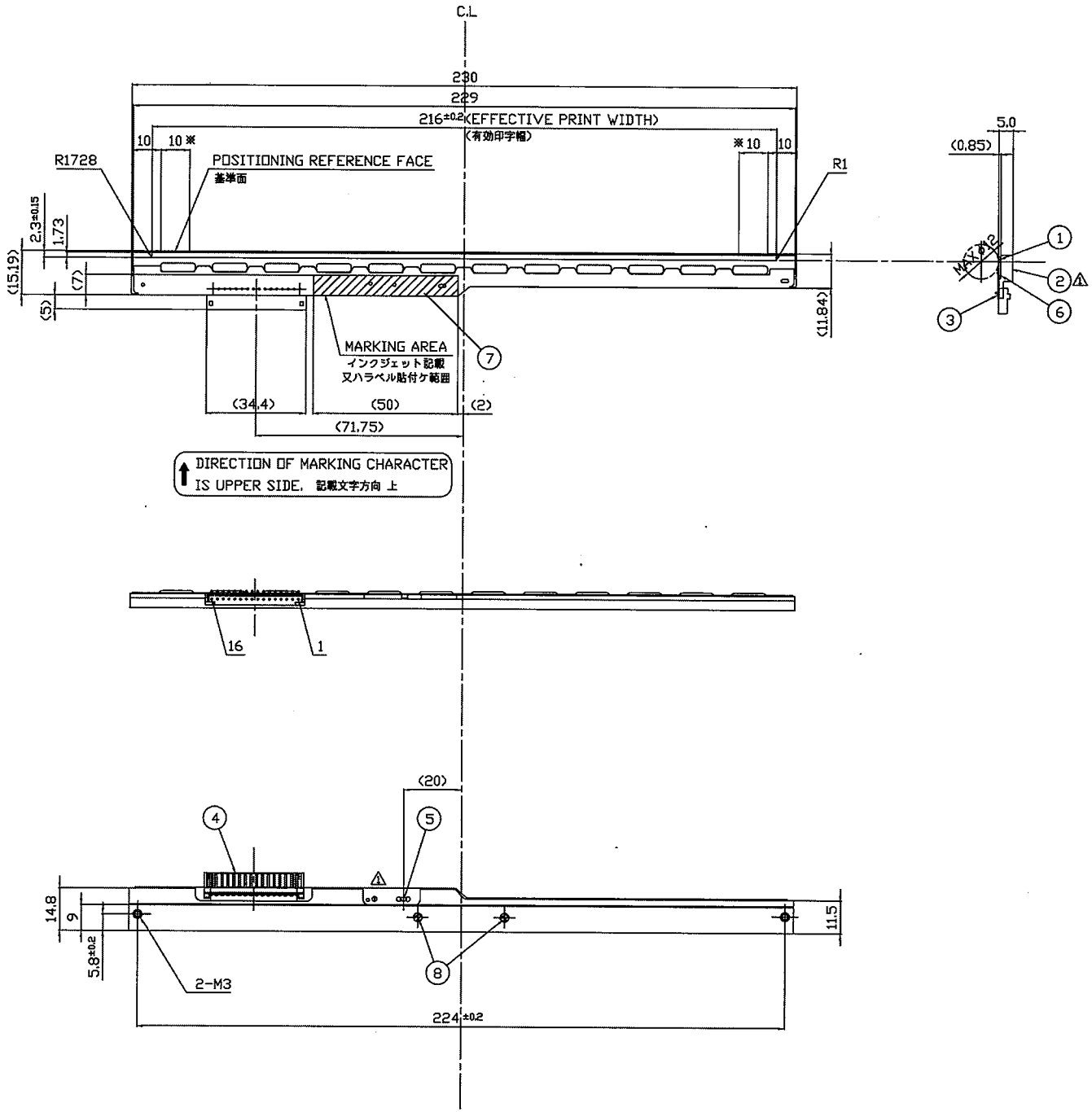

No	DESCRIPTION
1	SUBSTRATE (基板)
⚠ 2	HEAT SINK (放熱板)
3	FLEX,CABLE (FPC)
4	CONNECTOR (コネクタ)
5	CHIP THERMISTOR (チップサーミスタ)
6	ADHESIVE TAPE (両面テープ)
7	MARKING (ラベル)
8	ADHESIVE (接着剤)

KYOCERA

TITLE
KFA-216-8PAM1-STA
OUTLINE DWG