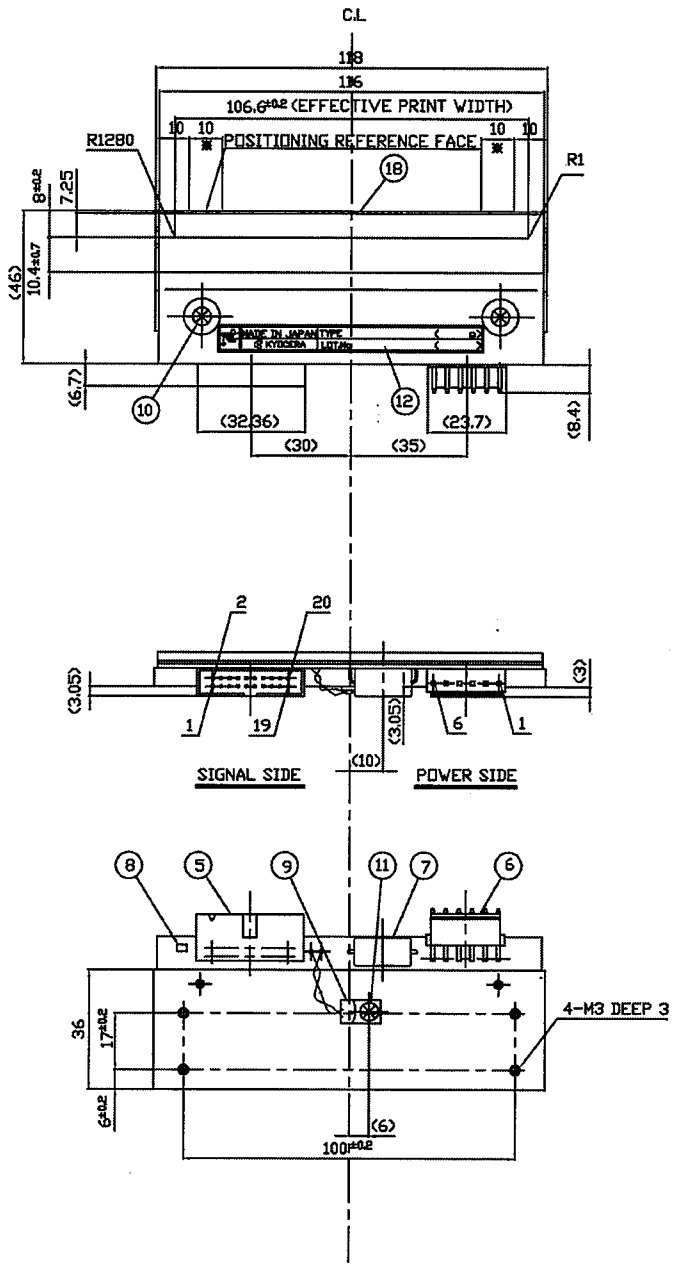

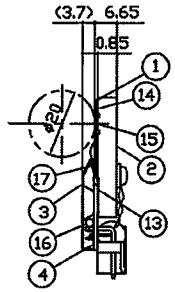

No	DESCRIPTION
1	SUBSTRATE
2	HEAT SINK
3	HEAD COVER
4	F P C
5	CONNECTOR 1
6	CONNECTOR 2
7	CAPACITOR
8	CHIP CAPACITOR
9	THERMISTOR
10	BINDING HEAD SCREW
11	PAN HEAD SCREW
12	MARKING
13	ADHESIVE TAPE 1
14	ADHESIVE TAPE 2
15	GREASE
16	WIRE
17	ADHESIVE 1
18	ADHESIVE 2

KYOCERA

TITLE
KHT-107-12TAJ1-STB
OUTLINE DWG