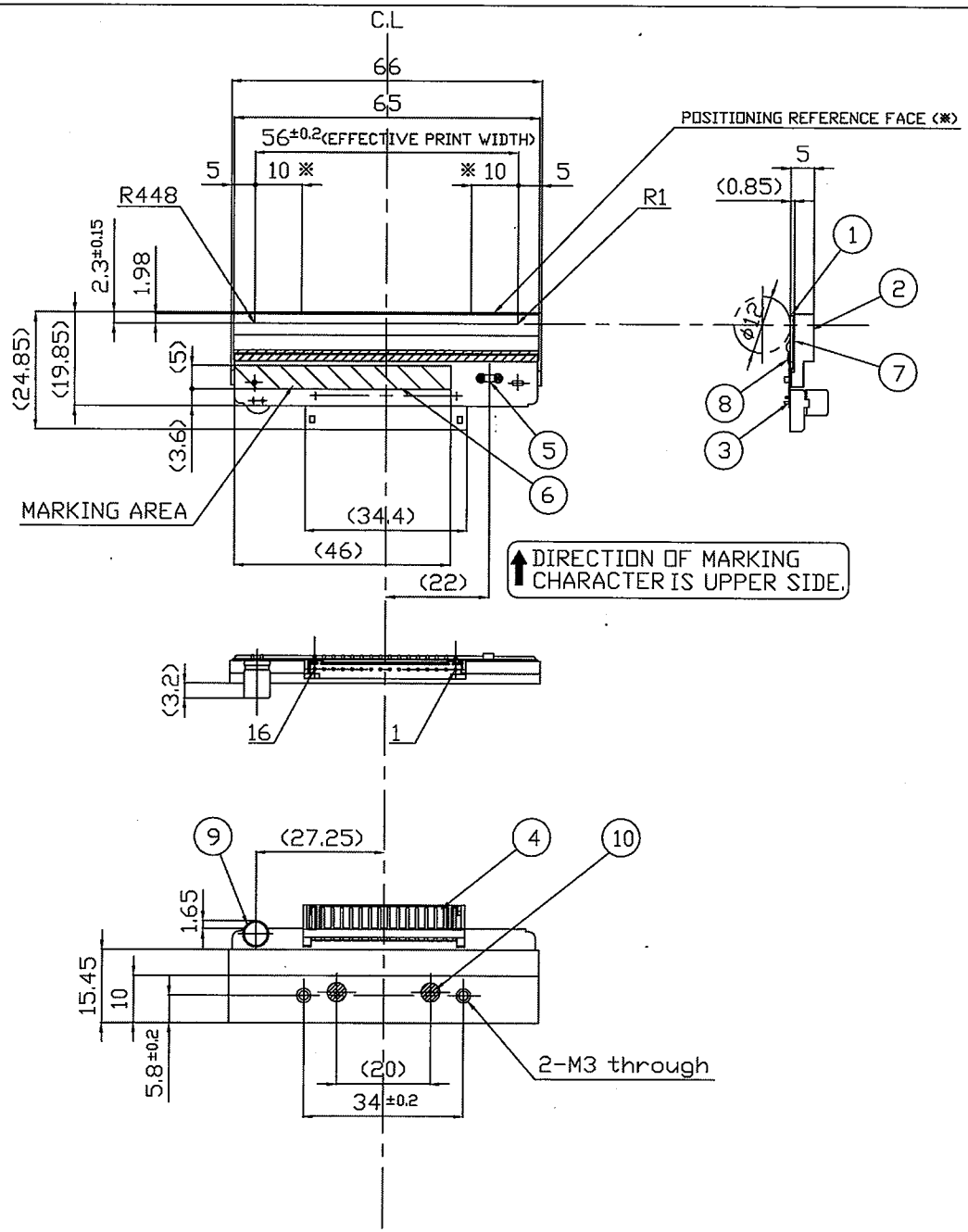

No	DESCRIPTION
1	SUBSTRATE
2	HEAT SINK
3	F P C
4	CONNECTOR
5	CHIP THERMISTOR
6	MARKING
7	ADHESIVE TAPE
8	ADHESIVE 1
9	CAPACITOR
10	ADHESIVE 2

KYOCERA

TITLE
KYT-56-8MPP1-STT
OUTLINE DWG