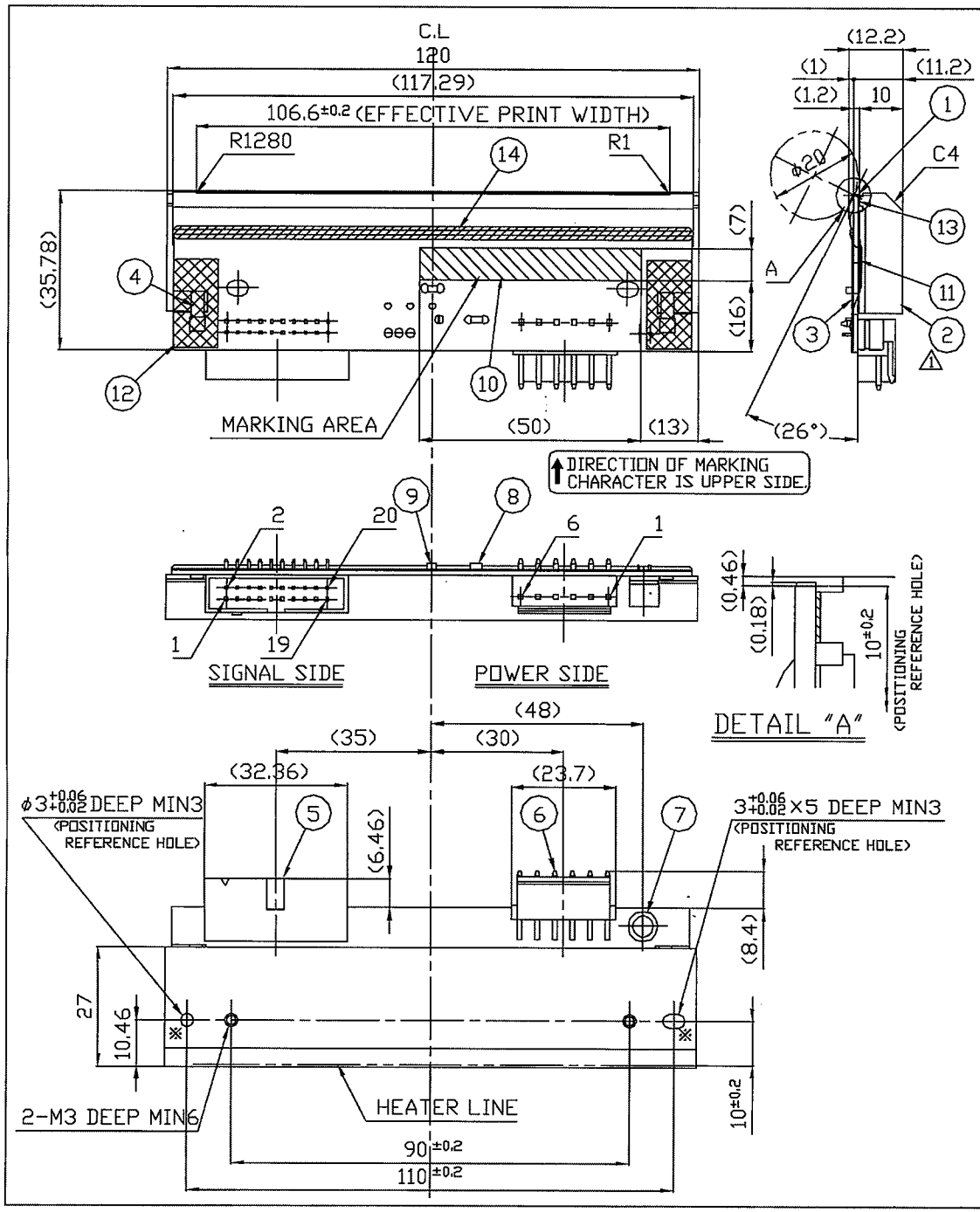

No	DESCRIPTION
1	SUBSTRATE
2	HEAT SINK
3	F.P.C. 1
4	F.P.C. 2
5	CONNECTOR 1
6	CONNECTOR 2
7	CAPACITOR
8	CHIP CAPACITOR
9	CHIP THERMISTOR
10	MARKING
11	ADHESIVE TAPE
12	INSULATING TAPE
13	ADHESIVE 1
14	ADHESIVE 2

KYOCERA

TITLE

KCE-107-12PAJ2-STB
OUTLINE DWG