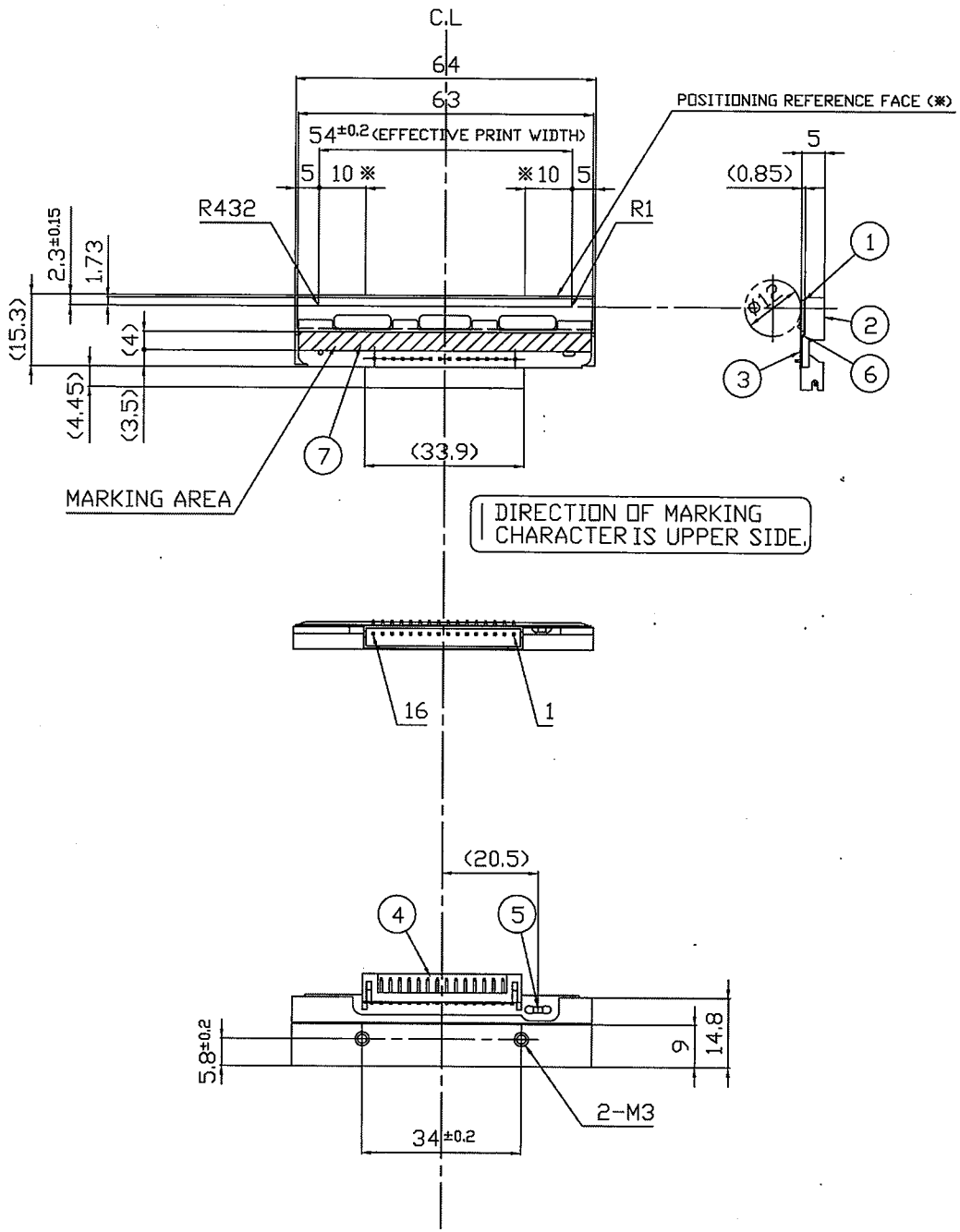


| No | DESCRIPTION |
|---|---|
| 1 | SUBSTRATE |
| 2 | HEAT SINK |
| 3 | FLEX,CABLE |
| 4 | CONNECTOR |
| 5 | CHIP THERMISTOR |
| 6 | ADHESIVE TAPE |
| 7 | MARKING |

KYOCERA

TITLE
KPB-54-8GAE1-STL
OUTLINE DWG