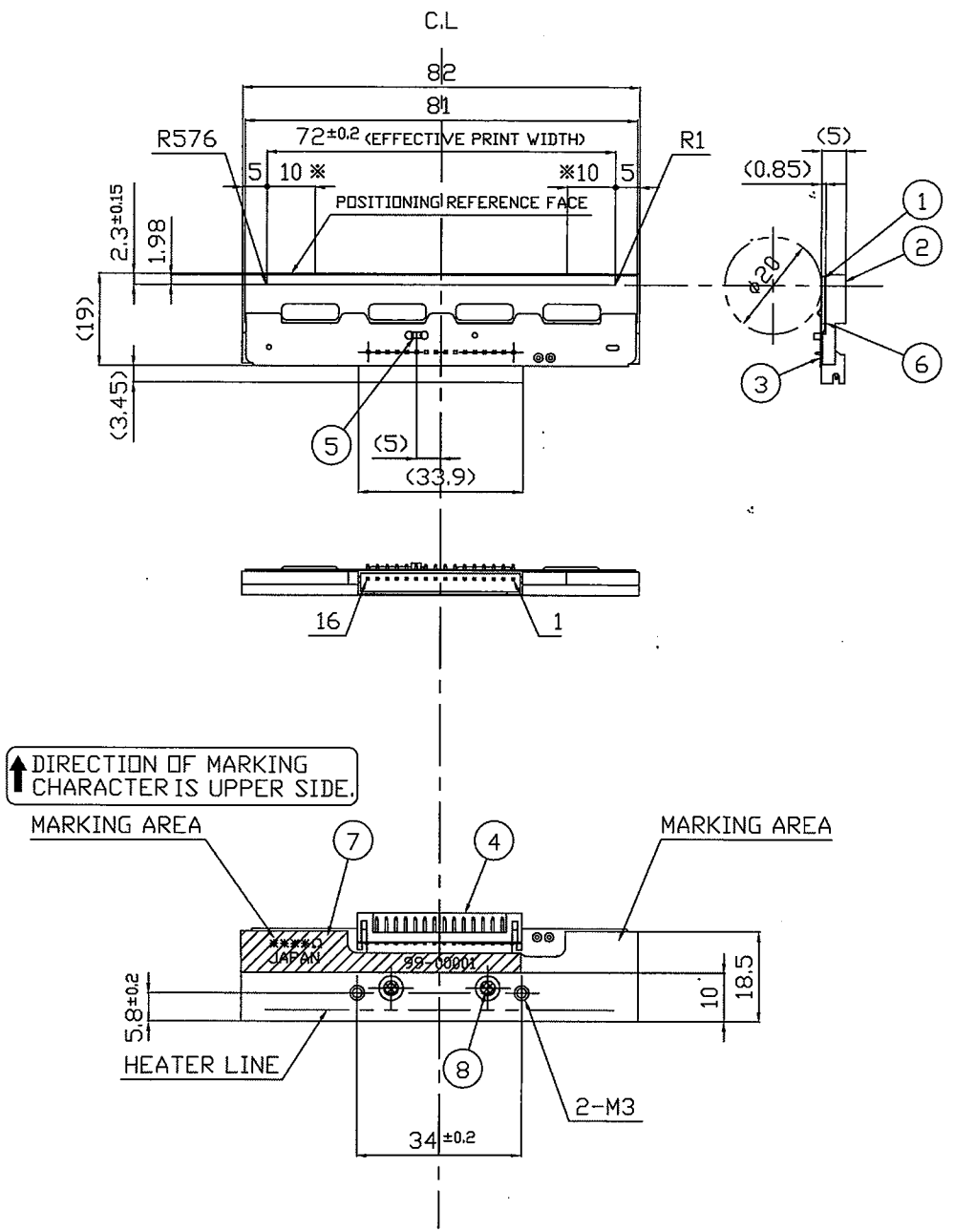

No	DESCRIPTION
1	SUBSTRATE
2	HEAT SINK
3	FLEX,CABLE
4	CONNECTOR
5	CHIP THERMISTOR
6	ADHESIVE TAPE
7	MARKING
8	ADHESIVE

KYOCERA

TITLE
KPC-72-8TA01-STA
OUTLINE DWG